551.508.77

ROYAL OBSERVATORY, HONG KONG

Technical Note No. 47

A REMOTE RECORDING DIGITAL TILTING-BUCKET RAINGAUGE

by

H.K. LAM
and
P.C.S. LI

MARCH, 1979

CROWN COPYRIGHT RESERVED

CONTENTS

		page
	FIGURES	iii
	TABLE	iv
1.	INTRODUCTION	1
2.	THE REQUIREMENTS	2
3.	THE DESIGN	3
	(a) The CANON P10-D calculator	3
	(b) The tilting-bucket raingauge interface	6
	(c) The clock	9
	(d) The clock interface	12
	(e) The power supply	15
4.	THE COMPLETE SYSTEM	18
5.	DISCUSSION	20
	REFERENCES	21

FIGURES

		page
1.	PRINTED CIRCUIT BOARD OF A CANON P10-D CALCULATOR KEYBOARD	4
2.	CALCULATOR SOCKET	5
3.	A TILTING BUCKET RAINGAUGE	7
4.	TILTING BUCKET RAINGAUGE INTERFACE	8
5.	TIME BASE	10
6.	CLOCK DIGIT MULTIPLEX	11
7.	CLOCK DISPLAY	13
8.	CLOCK INTERFACE	14
9.	12-VOLT DC POWER SUPPLY	16
10.	37-VOLT DC POWER SUPPLY	17
11.	A SAMPLE PRINT-OUT	19

TABLE

page

1. DIGIT SELECT TRUTH TABLE FOR MM5318 9

1. INTRODUCTION

In August 1978, The Geotechnical Control Office of the Public Works Department requested the Royal Observatory to design a system whereby the amount of rainfall recorded by a network of tilting-bucket raingauges could be telemetered back using telephone lines to a control office at Murray Building. The amount of rainfall accumulated in each 15-minute interval was to be printed at the end of the interval together with the time. The requirement was classified as extremely urgent because the raingauges were to be located on slopes which had been identified as being susceptible to landslips. Installation of the raingauges was to be done and operational data obtained as quickly as possible to monitor the amount of rainfall at each slope for the rest of the 1978 wet season. A crash program was initiated at the Royal Observatory and a number of designs were made and tested. A final design was chosen and a prototype built in less than a month. This note describes this final design but because of the short time scale, it is not claimed to be optimal although it is functioning satisfactorily.

2. THE REQUIREMENTS

The design must satisfy the following requirements :-

(1) Since rainfall data are telemetered by ordinary voice-grade telephone cables, noise picked up by the cable must not affect the raingauge readings.

(2) The design must be capable of operating over telephone circuits with different loop resistances up to a maximum 6000 ohms.

(3) Large currents or current surges of the order of hundreds of milliamperes associated with normal relays are not allowed in telephone cables.

(4) A circuit is required to eliminate bouncing effects as the bucket tilts.

(5) The rainfall data accumulated in a 15-minute interval must be printed together with the time at the end of the interval.

(6) Battery back-up, lightning protection, transient protection and high noise immunity are required.

(7) Since the system is to be operated continuously 24 hours a day, reliability and minimum heat dissipation are essential.

(8) The system must be able to handle at least 20 raingauges with capability for future expansion.

3. THE DESIGN

The requirements call for all rainfall data to be printed at 15-minute intervals. While it would be more compact to have one printer serving all the raingauges with an indicator heading for each station, the electronic interface required to control the printing mechanism and to route rainfall data from different locations to the central printer would require time multiplexing, memory for storage and more complicated design and construction. Due to the short time allowed for this project, it was decided to modify commercially available calculators with built-in printers so that instead of controlling the actual printing mechanism, the keys of the calculator were electronically activated to control data entry and printing. One raingauge would be interfaced to one calculator so that routing of data was simplified. For high noise immunity, low power consumption and high fan-out, complementary metal oxide silicon (CMOS) integrated circuits were used.

(a) The CANON P10-D calculator

Fig. 1 shows the printed circuit of the keyboard of a CANON P10-D calculator. Each key of the calculator can be activated by shorting the two printed circuit board terminals corresponding to each key. Shorting is done via 300-ohm resistors to prevent excessive current drain. The fact that each key can be activated via a 300-ohm resistance shows that it can be activated by an electronic switch of 300-ohm ON-resistance. The signal and return lines of 15 keys were identified and extracted to an external connector (Fig. 2). The 15 keys include 10 numeric keys from 0 to 9(D1 to D9), the decimal key (DEC), the add function (+) key, the print total function (*) key, the print entry function (#) key and the printer on-off switch. Control signals for activating these keys originate from two interfaces : the tilting-bucket raingauge interface which provides rainfall data and the clock interface times the calculator and initiates printing at the programmed time. The calculator is hard-wired to the floating point format so that time is always given as a whole number while rainfall data is given only in the significant decimal digits. Battery back-up of the calculator is provided by the built-in Ni-Cd rechargeable battery.

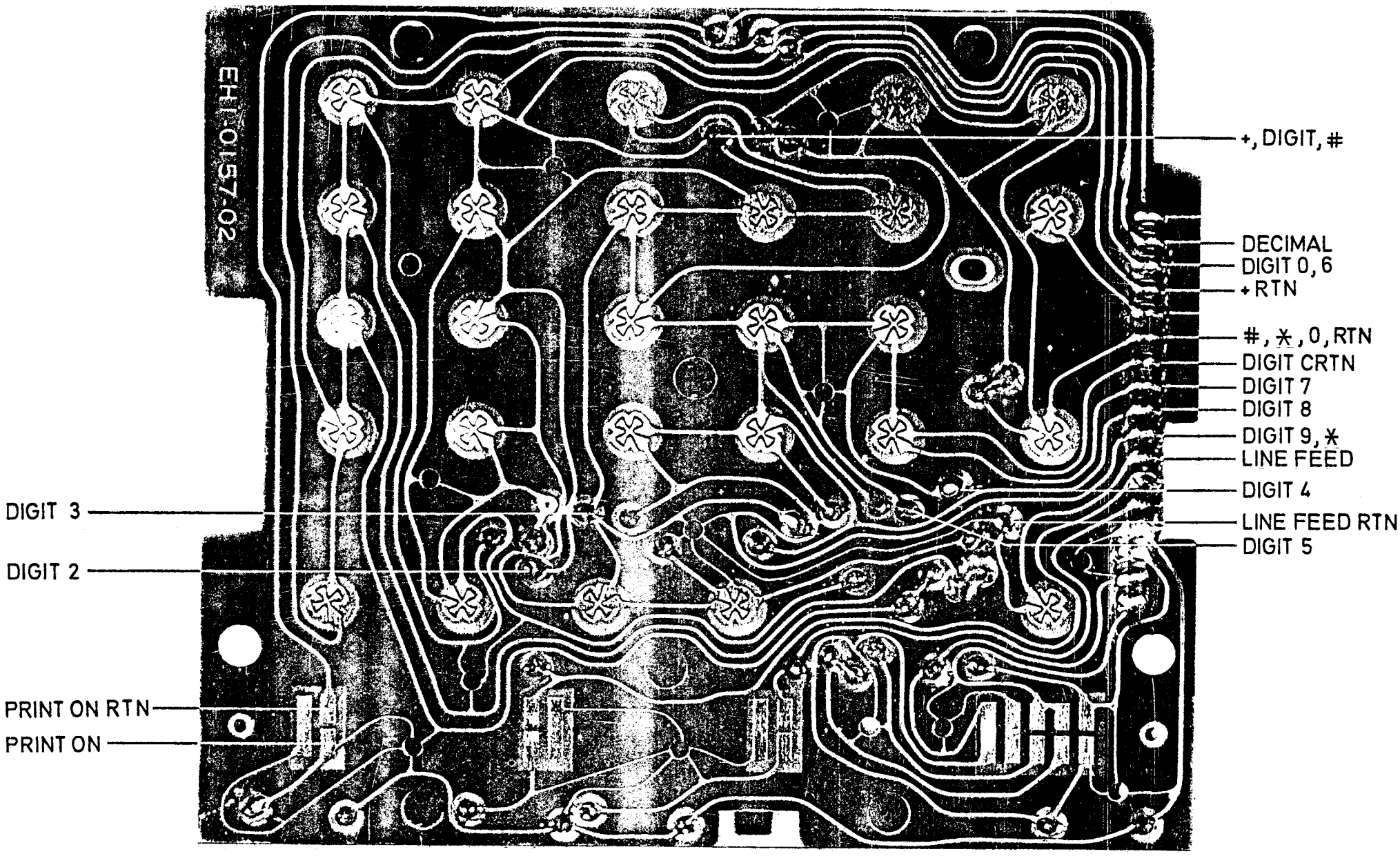

FIG. 1 PRINTED CIRCUIT BOARD OF A CANON PIO-D CALCULATOR KEYBOARD

PRINT ON RTN	1	16	
PRINT ON	2	15	D 2
# * 0 RTN	3	14	D 3
D 9 *	4	13	D 4
D 8	5	12	D 0, 6
D 7	6	11	D 5
DEC	7	10	+, D 1, #
DRTN	8	9	+ RTN

FIG. 2 CALCULATOR SOCKET

(b) The tilting-bucket raingauge interface

Fig. 3 shows a typical tilting-bucket raingauge. The two buckets are balanced on a pivot carrying a magnet. Whenever 0.5 mm of rainfall is collected in any one of the buckets, it tilts and the magnet moves past a dry reed switch which produces a contact closure. Because of the elasticity of the metallic reed contacts and some bouncing of the bucket itself, multiple contact closures from the reed switch may result from one tilting. A monostable circuit having a time constant of 1.5 seconds was used to eliminate these bounces. This means that the raingauge will record rainfall rates up to a maximum of 0.5 mm in 1.5 seconds or 1200 mm/h. This time constant was chosen since the maximum instantaneous rainfall rate recorded since records began in 1952 is 700 mm/h.

Fig. 4 is a schematic diagram of the tilting-bucket raingauge interface to the CANON calculator. Integrated circuit 'A' is a voltage regulator type 7824 connected as a constant current source as well as a current limiter. It provides a constant current of 15 mA to a load of less than 600 ohms and protects the circuit against accidental shorting of the telephone lines. The current is used to activate the coil of a reed switch which isolates the telephone lines from the rest of the circuit. The constant current source is powered by 37 Vdc so that 6 mA is available through a loop resistance of 6000 ohms. The input reed switch can be activated by a current of 5 mA flowing through the control coil.

The set-reset flip flop formed by Ba and Bb is set at each tilt of the bucket. This allows a 5 Hz signal into the counter 4017C to start the pre-programmed sequence of data entry. Output from the counter controls a quad bilateral switch 4016D which is connected to the decimal (DEC), numeral 5 (D5) and addition (+) keys of the calculator. Hence one tilt of the bucket enters 0.5 to the accumulation register of the calculator.

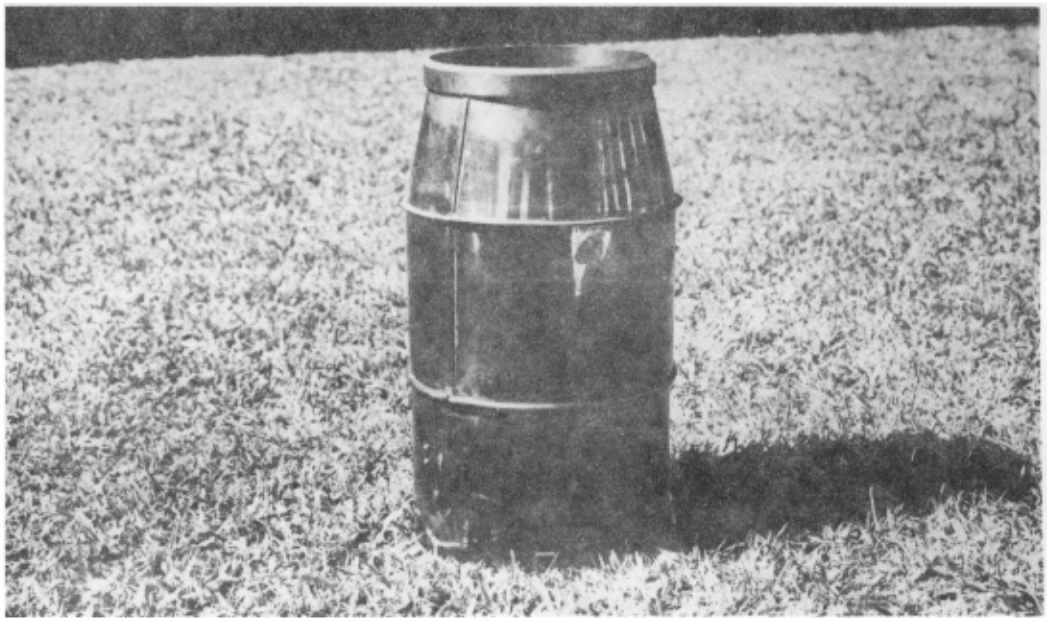

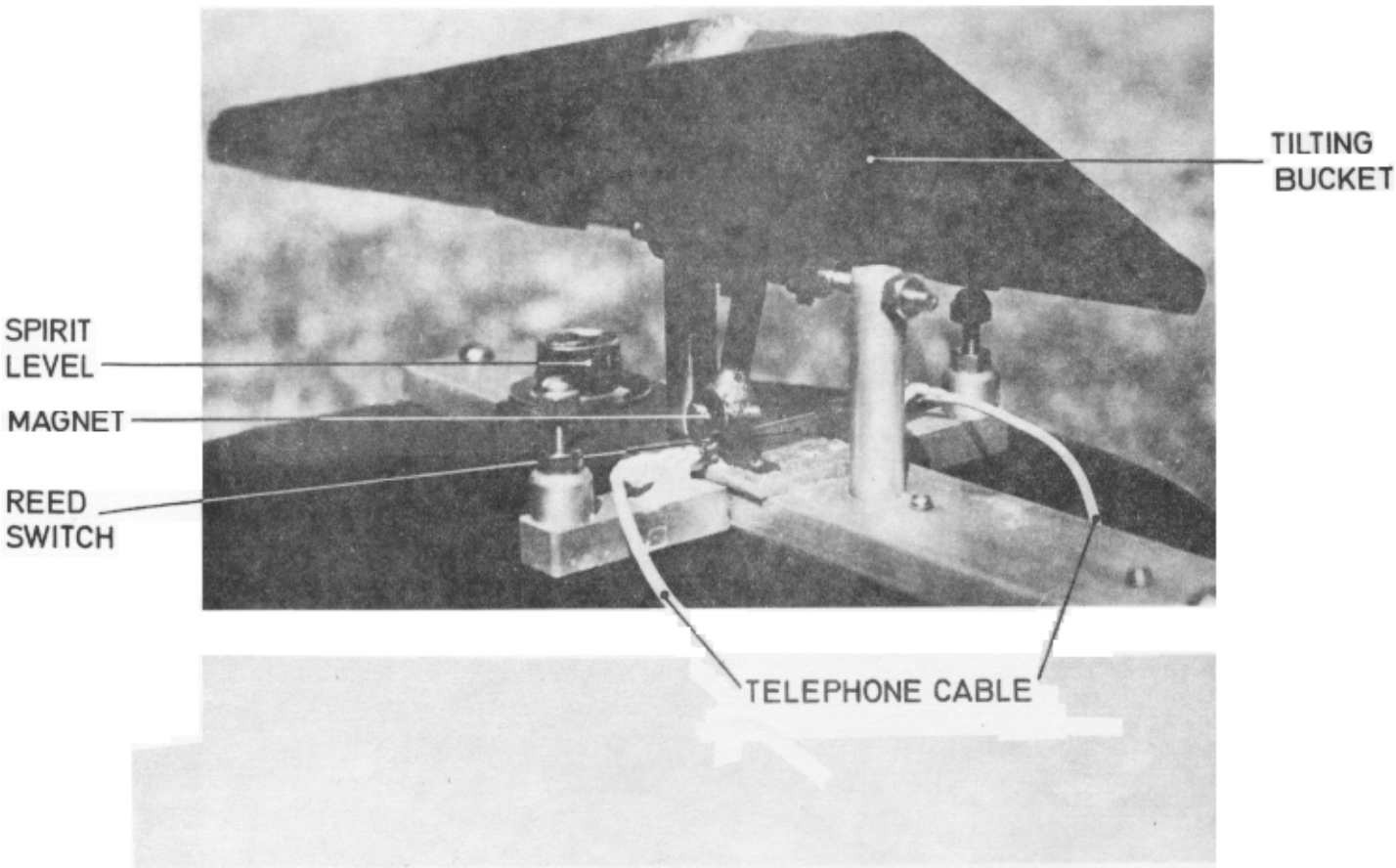

FIG. 3 A TILTING BUCKET RAINGAUGE

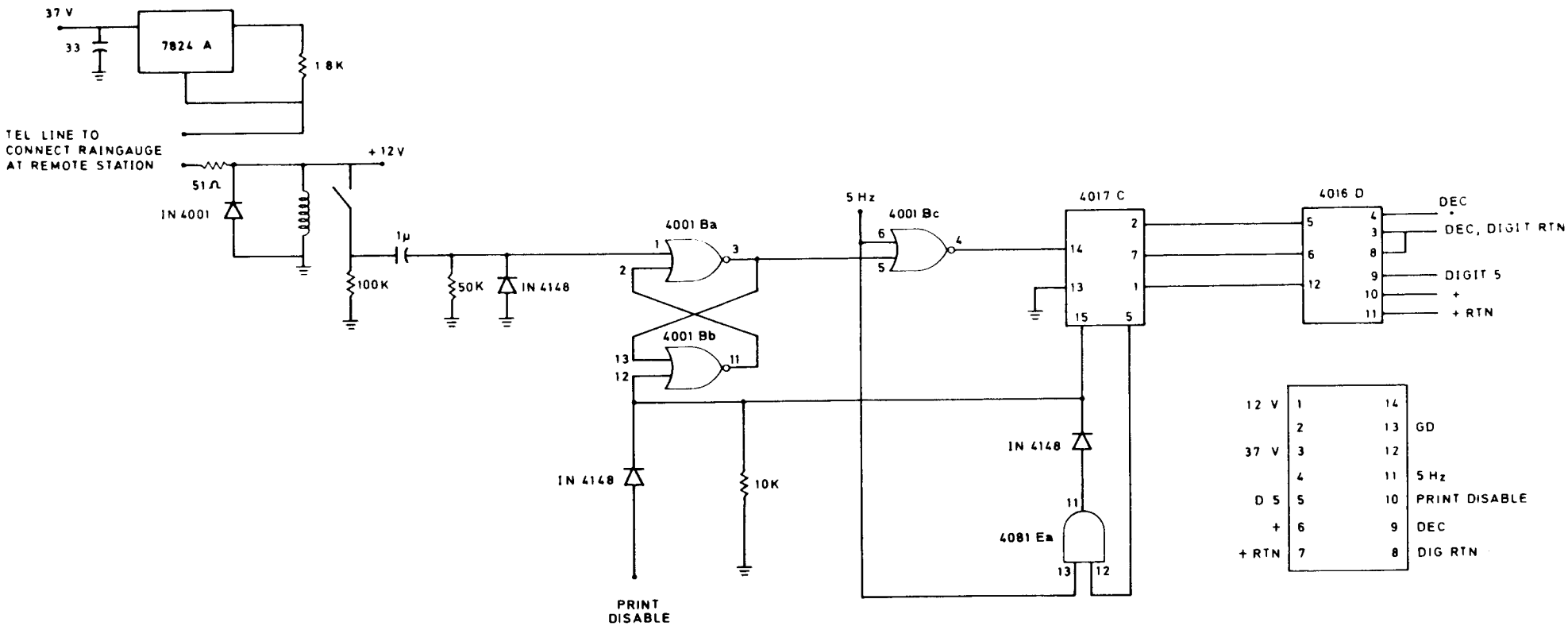

FIG. 4 TILTING BUCKET RAINGAUGE INTERFACE

(c) The clock

Timing of the entire system as well as time entries are provided by a crystal-controlled clock. A 1 MHz crystal oscillator is used as the basis of this system and is implemented by Aa (Fig. 5). Integrated circuits Ba, C, D, G, H and I form a counter/decoder chain to produce the necessary waveforms of periods 20 ms, 0.1 s, 0.2 s, 1 s and 900 s respectively. Switch S1 controls the beginning of the 900-second interval.

The MM 5318 large scale integration (LSI) clock chip is used to produce the time of the day information. This chip was selected because its output is in a digit-serial bit-parallel binary-coded decimal format which will be seen later to be suitable for controlling data entry to the calculator. The serial output rate of the digits is controlled by three control lines DX, DY and DZ. Different binary combinations of high's and and low's on these lines result in different digits appearing at the output. Table 1 shows the truth table.

4029J (Fig. 6) is a down counter preset to count from binary seven to zero utilising a 10 Hz clock. Its output controls the three control lines of the MM 5318 clock chip.

TABLE 1. Digit select truth table for MM 5318

Digit select lines	Digit displayed							
	S1	S10	*	M1	M10	*	H1	H10
DX	1	0	0	1	1	0	0	1
DY	1	1	0	0	0	0	1	1
DZ	0	0	0	0	1	1	1	1

* output blanked

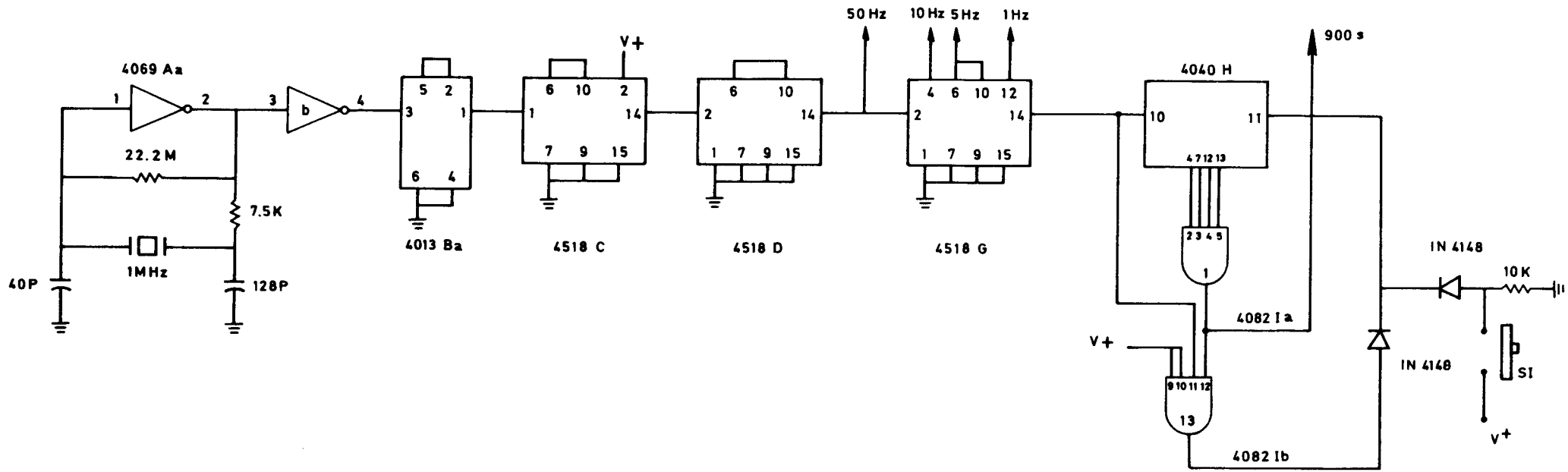

FIG. 5 TIME BASE

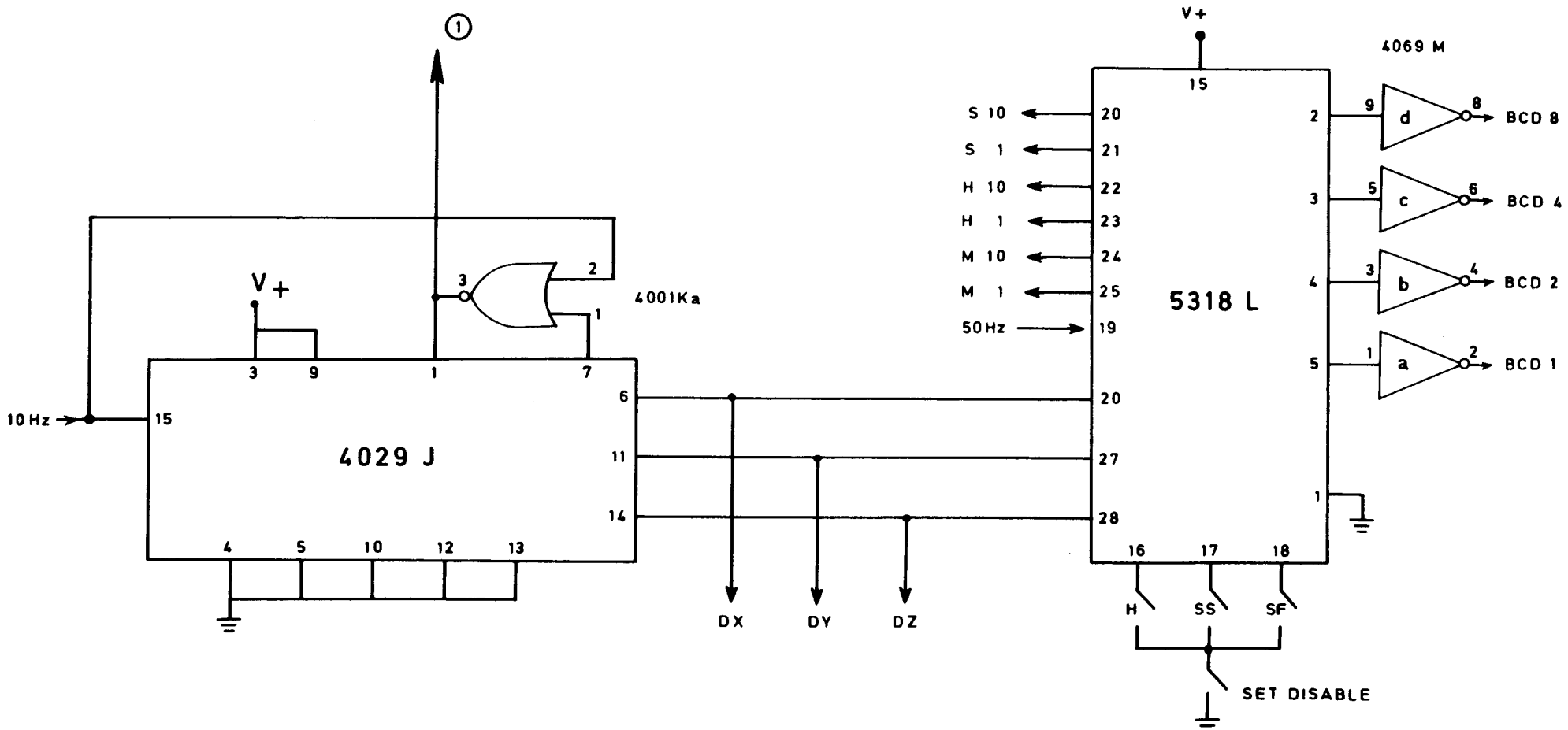

FIG. 6 CLOCK DIGIT MULTIPLEXER

The binary-coded decimal (BCD) output of MM 5318 is latched by four BCD-to-7-segment latch/decoder/drivers 4511 which directly drive four seven-segment common cathode LED displays for tens of hours, unit hours, tens of minutes and unit minutes (Fig. 7). The H10, H1, M10 and M1 outputs of the clock chip provide the synchronous latching pulses to each 4511. This is done for each output via a PNP transistor 2N4044, a differentiating RC network and an inverter.

(d) The clock interface

The output of the MM 5318 is in a digit-serial format which meets the requirement to enter data serially into the calculator. The serial output rate is limited to 10 Hz because experiment have shown that the calculator cannot accept entries faster than 15 Hz. The tens of hours digit is entered first followed by the unit hours, tens of minutes and unit minutes. This entry is required at 15 minute intervals. The tens of seconds and unit seconds are not entered.

Fig. 8 shows the schematic diagram of the clock interface to the CANON calculator.

The 900 s pulse sets the flip flop 4013 Bb, switches on the printer of the calculator via a NPN transistor BC107 and a reed switch, disables the raingauge interface and starts the preprogrammed sequence of time entry. The preprogrammed sequence is controlled by a counter 4017 V using a 1 Hz clocking pulse. 4013 Wa and associated gates allow the BCD output from MM 5318 to enter the display register of the calculator interface whenever a tens hour digit is detected and ceases the entry when a unit minute digit is detected. Gates Ec, Ad and Kb prevent the entry of unit second and tens second digits into the register. This is necessary because, as shown in Table 1, the two seconds digits would be strobed before the unit minute.

The above control signals together with a 10 Hz strobe are fed into the calculator via a 4-input OR-gate (4072 Pa). The 10 Hz strobe is

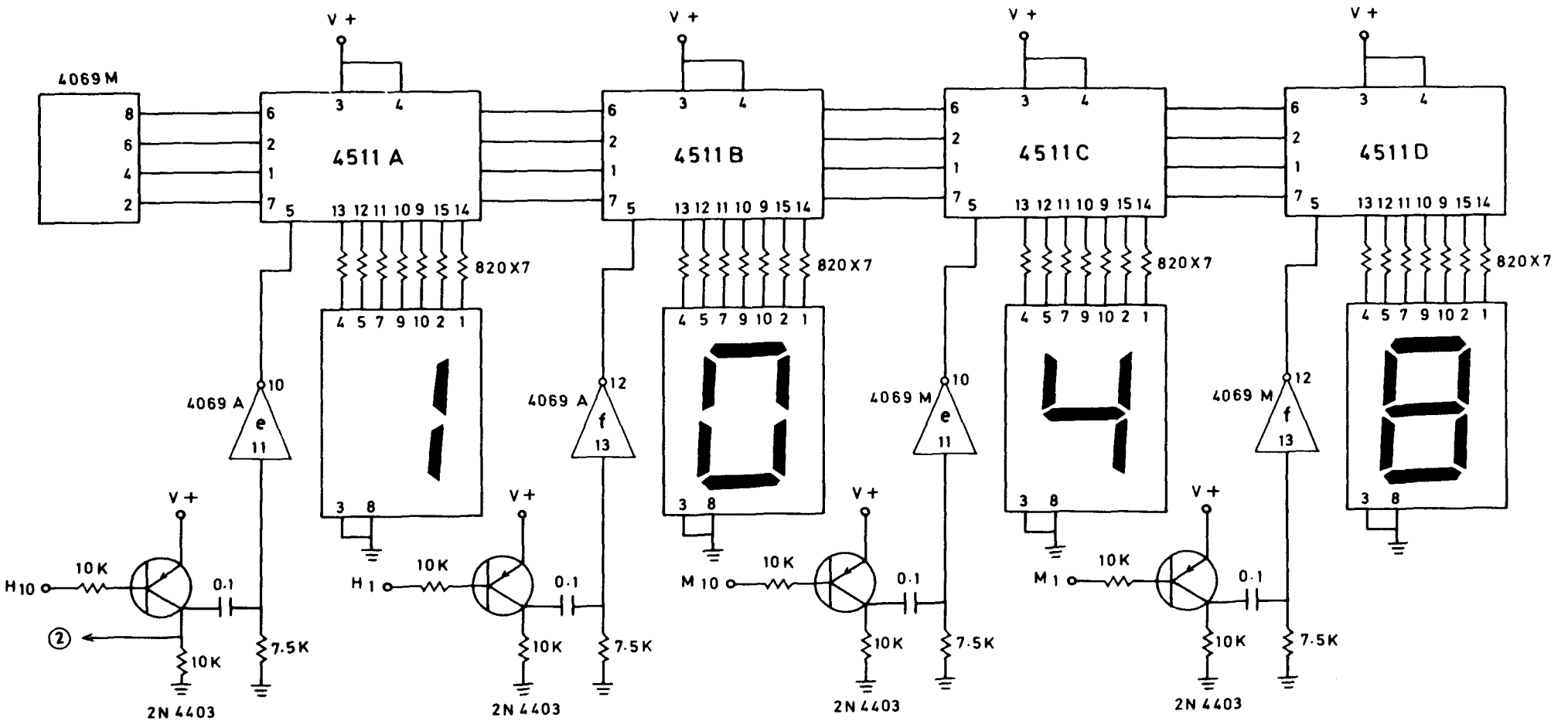

FIG. 7 CLOCK DISPLAY

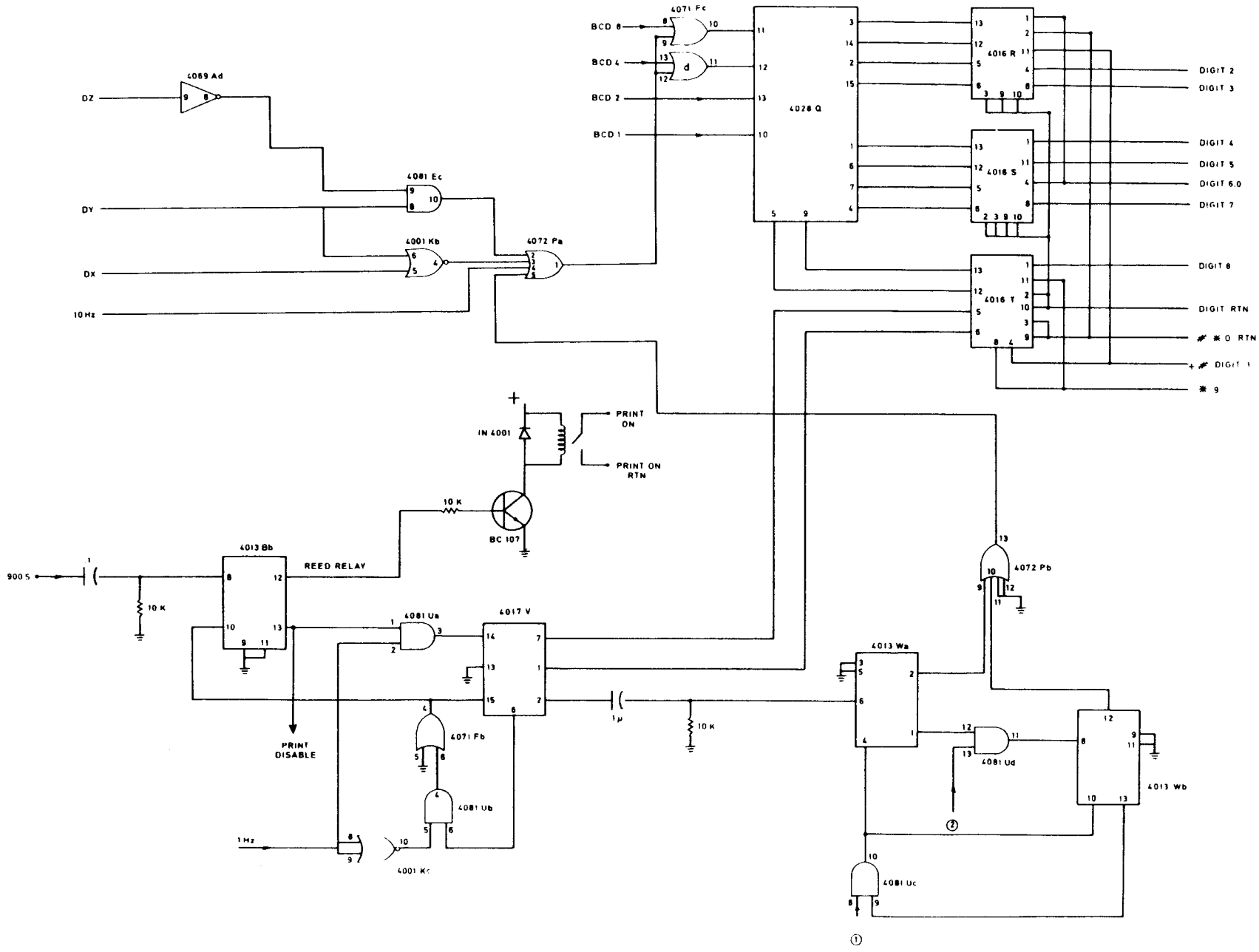

FIG. 8 CLOCK INTERFACE

necessary to separate two identical consecutive digits output from MM 5318 as two distinct inputs to the calculator. The 10 Hz clocking is the maximum clocking frequency for data entry into the calculator.

To convert BCD signal levels to the corresponding switch closures for the calculator, a BCD-to-decimal converter 4028 Q and three quad bilateral switches 4016 (R, S, T) are used. 4028 Q controls the switch closures for numeric keys 0 to 9 while the second and third outputs of the counter 4017 V control the switch closures for the print entry (#) and print total (*) keys of the calculator. The former prints the time entered into the display register while the latter prints the content of the accumulation register which holds the total amount of rainfall recorded in the previous 15 minutes. The print total function also automatically clears the accumulation register to prepare recording for the next 15-minute interval. The display of the calculator however still shows the previous total unless a new entry is made or until 15 minutes later when the zero content of the accumulation register is printed.

The outputs of the 4016 bilateral switches are connected to the calculator via the calculator socket as shown in Fig. 2.

(e) The power supply

Since CMOS integrated circuits are used throughout, power requirements are not critical and a simple 12 V 3A power supply is used (Fig. 9). Regulation is provided simply by a built-in dry rechargeable lead-acid battery (12 V 4.5 Ah) which also serves as a power back-up. The back-up time is estimated to be at least 8 hours. A similar 37 V 1 A supply is provided for the constant current source on the raingauge interface board (Fig. 10). All AC power inputs are provided with lightning surge suppressing varistors and high voltage 0.1 μ bypass capacitors to eliminate power transients due to lightning or nearby switching of heavy power equipment.

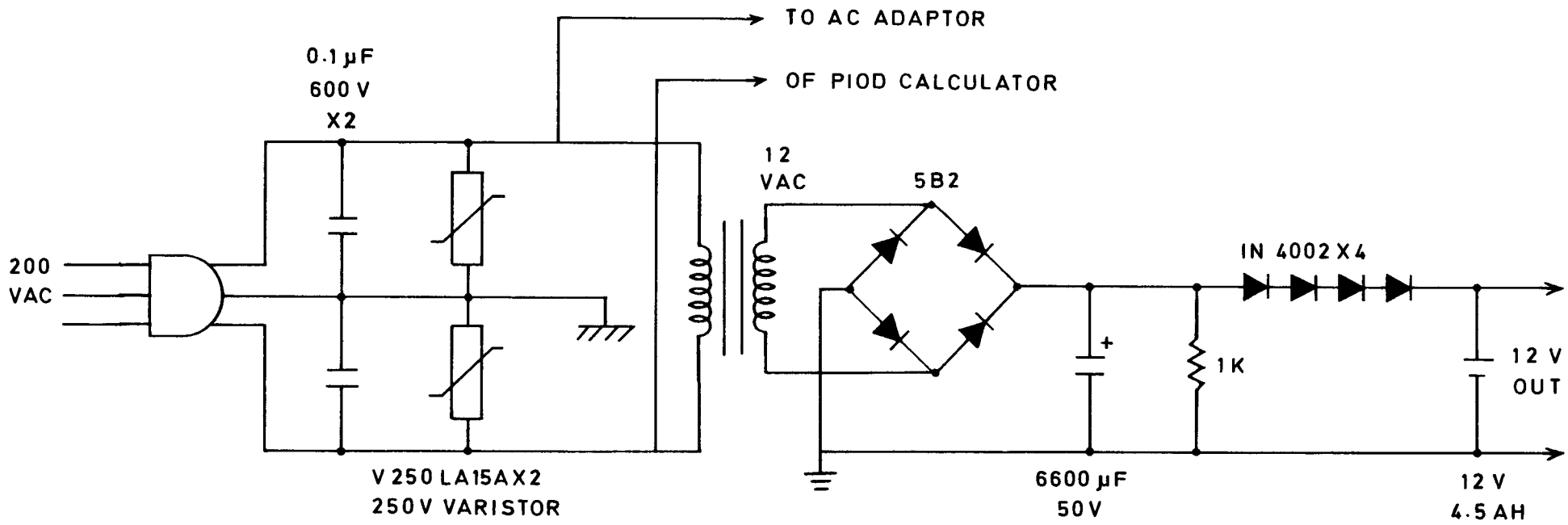

FIG. 9 12 VOLT POWER SUPPLY

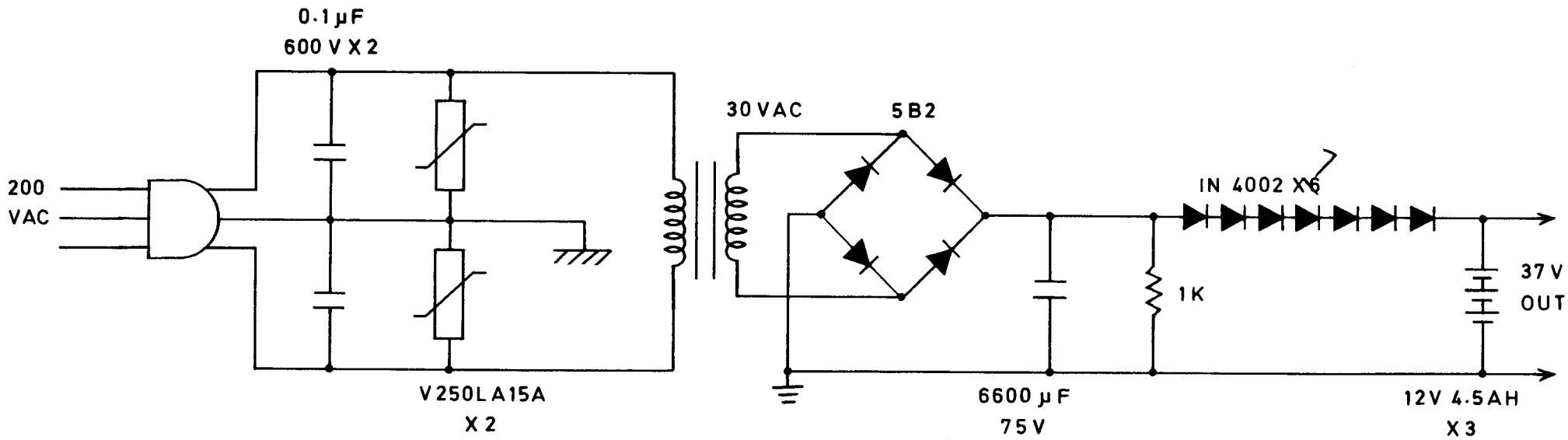

FIG. 10 37 VOLT POWER SUPPLY

4. THE COMPLETE SYSTEM

The complete prototype consists of one tilting-bucket raingauge interface board, one CANON P10-D calculator and one master timing control and clock interface board. To integrate a system of more than one raingauge, one raingauge interface board, one calculator and one set of quad bilateral switches (integrated circuits R, S, T) are required for each raingauge. However one timing control and clock interface board can control as many as 30 raingauge interface boards and enter time into 30 calculators simultaneously. Although the driving capability of the CMOS integrated circuits used could go up to at least 50 units, such a system would require long connection cables which could pick up unwanted interference and might cause deterioration in the performance of the entire assembly. The present system uses unshielded flat ribbon cables and it is estimated that it can accommodate a maximum of 30 sets while still providing a sufficient safety margin. The use of individually shielded multicore cables would eliminate noise pickup and increase the fan-out capability.

Lightning protection of the telephone lines is provided at the telephone company exchanges and no provision has been made in the present system for further protection.

Noises picked up in the telephone lines are mainly 50 Hz power noise and dialling tone noise around 140 Hz. Since they do not deliver any appreciable power, the coil of the input reed relay, which requires a minimum of 5 mA to activate, forms an effective noise filter. Further protection could be made by shunting the reed relay coil by an additional 500 ohm resistor which would double the required driving current and would further decrease the noise voltage amplitude.

Fig. 11 is a sample print-out. Each group of readings consists of a time followed by the total rainfall in mm recorded in the 15-minute interval ending at this time. Because of the design of the calculator, leading zeros are blanked so that times such as 0953 are printed as 953. The time to be printed can be reset to any value using the switch S1.

Accuracy of the crystal clock is about 5 parts in 10^6 which is equivalent to about one minute in twelve months.

```
 915.   #
   0.   T

 930.   #
   0.   T

 945.   #
   0.   T

1000.   #
   0.   T

1015.   #
   0.   T

1030.   #
   0.   T

1045.   #
  1.5   T

1100.   #
  0.5   T

1115.   #
   0.   T

1130.   #
   0.   T

1145.   #
   2.   T

1200.   #
   0.   T

1215.   #
   0.   T

1230.   #
   0.   T

1245.   #
   0.   T

1300.   #
   0.   T

1315.   #
   0.   T

1330.   #
   0.   T

1345.   #
   0.   T

1400.   #
   0.   T
```

FIG. 11 A SAMPLE PRINT-OUT

5. DISCUSSION

The present system is simple and can easily be expanded if necessary. Seventeen units have so far been installed at the Geotechnical Control Office. At the time of writing this note, they have been working continuously 24 hours a day for four months without any trouble.

The clock interface is a universal interface for any calculator using contact closure keys. Its principle can be applied to construct electronic interfaces to a printing calculator for other meteorological instruments having serialized digital outputs.

The greatest uncertainty on the system is the robustness of the printer. 96 print cycles are initiated every day with an average of 5 digits printed in each cycle. More than 180000 digits will be printed each year. Fortunately printing calculators of the CANON type P10-D cost about $400 each and one replacement per year should not be unduly expensive.

REFERENCES

1. Meteorological Office 1956 Handbook of Meteorological Instruments, Part I, Instruments for Surface Observation. HMSO.

2. National Semiconductor 1977 CMOS Databook

3. National Semiconductor 1977 MOS/LSI Databook